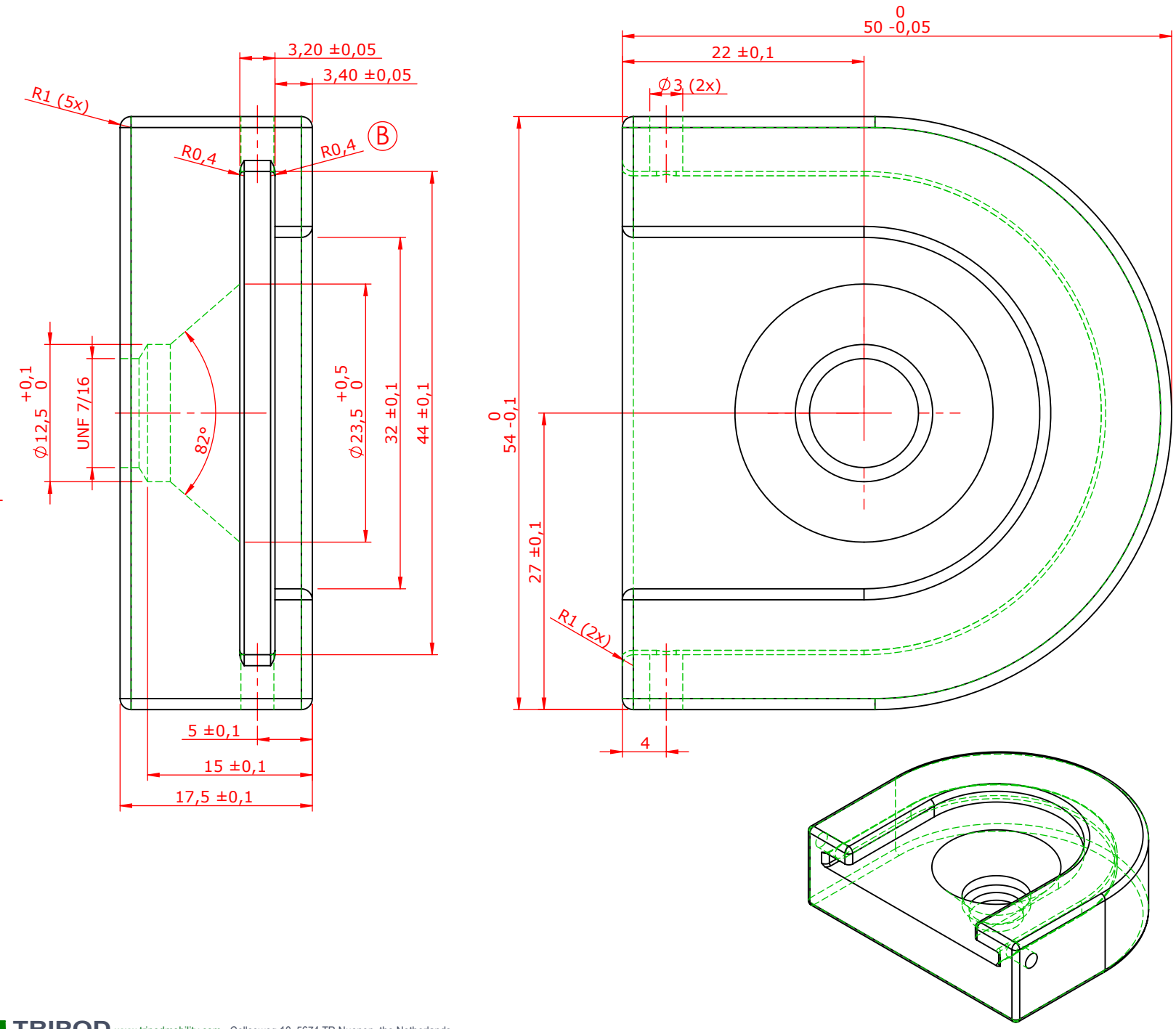

REVISIONS			
REV.	DESCRIPTION	DATE	APP.

All rights remain with TRIPOD MOBILITY BV. This applies especially to rights of invention. know-how, copyrights and rights to name as well as for the rights to patent these as commercial protective rights. All rights of disposition, particulary for copying or distributing reserved. Approval of first supply and change according to TRIPOD MOBILITY BV.

Drawn by S. Voormolen
Date 17-03-2022
Department Homologation

Material
-6061-T6 (SS)

Weight
81.52 [g]

Notes
- Measurements in mm
- Tolerance ±0.5mm
- Homologation drawing, prior to modification please consult Homologation department
-LHD and RHD

Homologation number
HOM-131-FKL1

Car(s)
-Mercedes Citan Tourer L1 2021-
-Renault Kangoo L1 2021-
-Nissan Townstar L1 2021-
-
-
-

Title
Wheelchair tie-down restraints, detail

Subgroup
Wheelchair tie-down

3rd	Scale 1:1	Sheets 1 of 1	A4	Part No. 19965

TRIPOD MOBILITY www.tripodmobility.com - Collseweg 10, 5674 TR Nuenen, the Netherlands
T +31(0)40 283 6442 - E info@tripodmobility.com